Sound Pressure Spikes & Rooms

Read along as ASC founder, president and TubeTrap inventor, Art Noxon, PE shares his knowledge on this technical topic!

“For every attack transient…

…there is a complex set of harmonics involved. Speaking from the Fourier Transform or FFT perspective, as most audio specialists like to talk about, it takes a huge harmonic series in order to create the attack transient, that very fast rise in sound pressure at the onset of a sonic event.

There is more to attack transients. They are actually not a tone. They are just a very fast rise in pressure, a spike up in sound pressure. At first the speakers, woofer, mids and highs are standing still and suddenly, as if a huge voltage is snapped across the terminals, all speakers instantly jump forward, creating a rapid vertical increase in sound pressure. After the rapid rise in simple pressure from no pressure to loud pressure, other things begin to happen to that sound, a tone appears for a short or long time and then it dies away, quickly or slowly.

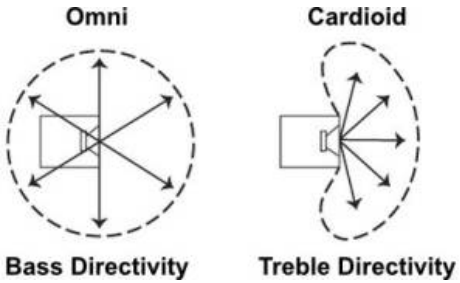

But it’s the pressure spike, the attack and the release that is our present focus, not the afterglow elements, the sustain and decay of the sound. When the speakers jump forward, a pressure pulse is created in the front of the listening room, right around the loudspeakers. The pulse from the mids and highs are typically projected forward because of the size of the baffle board of the speaker. But as for the bass part of that pulse, what the 500 watt power dump into the woofer is doing, the instantaneous pressure pulse snaps out from the speaker with equal strength in all directions.

Now a third of this pulse snaps away in the front/back direction, a third in the lateral or left/right direction and the other third of the energy snaps in a vertical, up-down direction. This means a third of the energy output in generally headed in the right direction, towards the listener and it also means that two-thirds of the speaker’s energy is headed in the wrong direction, exactly perpendicular to the front-back direction.

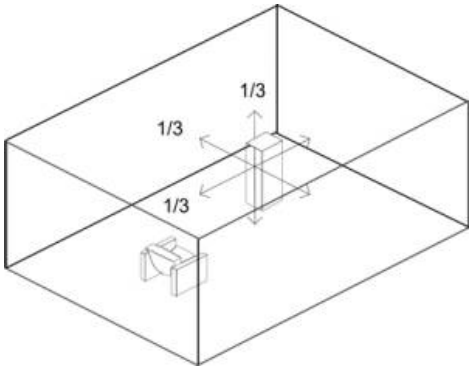

The direct part…

…of the wavefront snaps toward the listener at the speed of sound. The other 2/3rds of the wavefront snaps also at the speed of sound but in all directions perpendicular to the front-back dimension. What happens to this powerful perpendicular shock wave? It gets trapped up in the front of the room. Bouncing back and forth, careening around all 4 surfaces, the two side walls, the floor and ceiling up in the front of the room. I have nicknamed this effect head-end ringing.

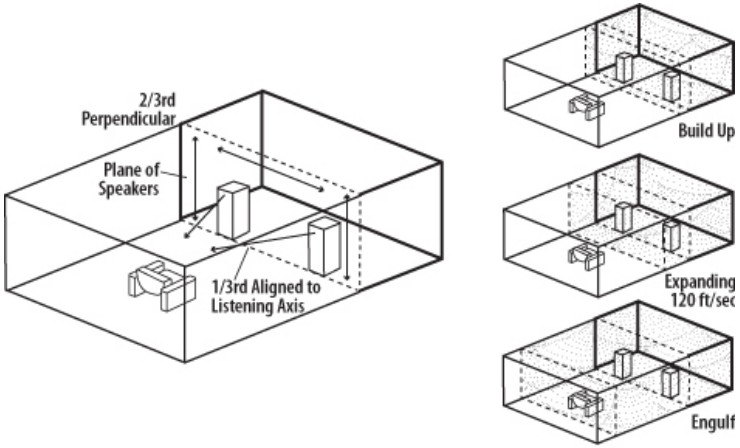

While the remnants of the huge pressure spike are still bouncing around up in the front end of the room, the multiply reflected, and now scrambled sound begins to expand naturally into the rest of the room, down the room at about 1/10th the speed of sound, about 120 feet per second oozing right towards the listener. After about 1/12 second the head-end ringing noise begins to significantly engulf the listener with a rising chaos of sound that sounds just like the direct sound the listener just heard except it is arriving a little later and except that the evolution over time of the various frequency components are completely scrambled up.”

Continue reading Art’s article, there’s much more to share!

The ASC Newsletter

For audiophiles and studio engineers our acoustic newsletter delivers interesting, relevant and proven technical advice, tips and tech talk.

View our **Archive** to see what we talk about!

Sign Up!

* indicates required

First Name

Last Name

Email Address *

Interests *

Subscribe

Latest Newsletter

Media & News

Art's Blog
Art's Presented Papers
Art's Published Articles
Art's White Papers
ASC Newsletter
Awards
News
Studio Engineers
Suggested Reading
Reviews & Articles
Videos

Acoustic FAQ

TubeTrap
IsoThermal TubeTrap
TubeTrap History
AttackWall History
QuickSoundField User Guide
Acoustic Basics
Acoustic FAQ
Soundproofing Concepts

About ASC

About ASC
Contact Us
Dealers
Friends We Keep
Media Kit & Logos
Staff
Privacy Policy
XML Sitemap

Orders & Details

Product Catalog
Product Categories
Colors & Fabric Swatches
Shipping Information
Ordering, Warranty & Returns

541-343-9727

800-ASC-TUBE

info@acousticsciences.com

© Acoustic Sciences, Corp.